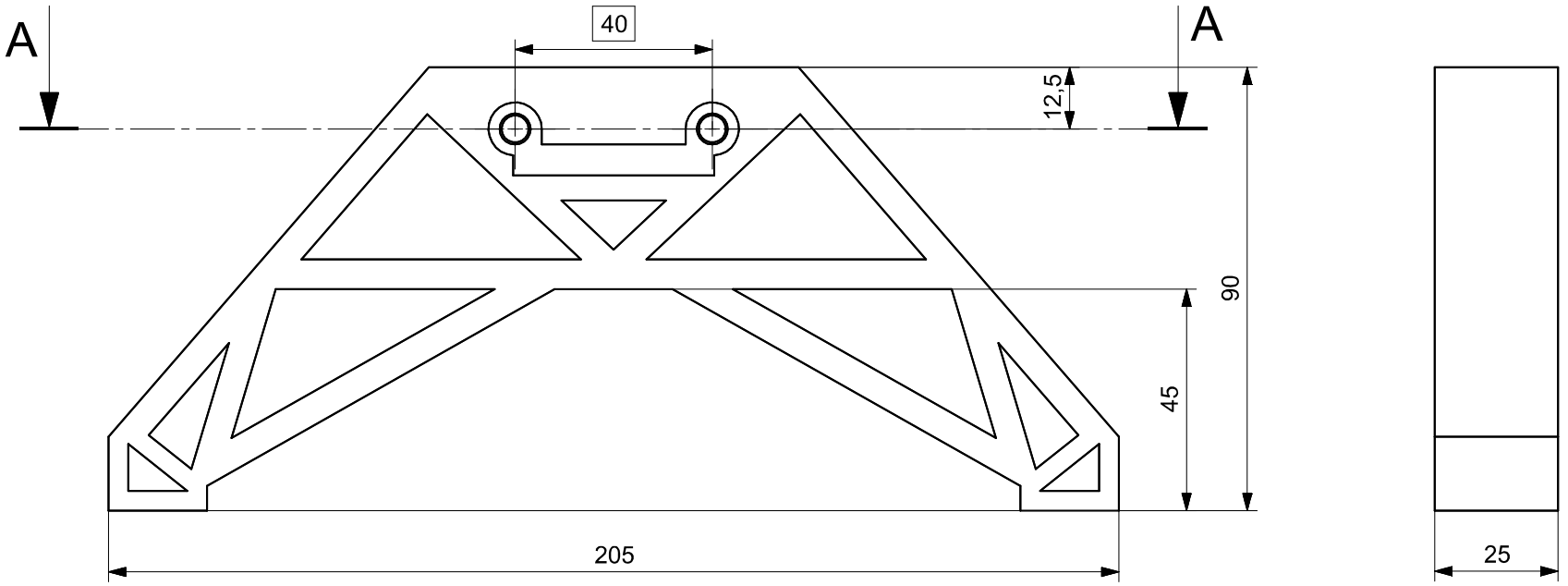

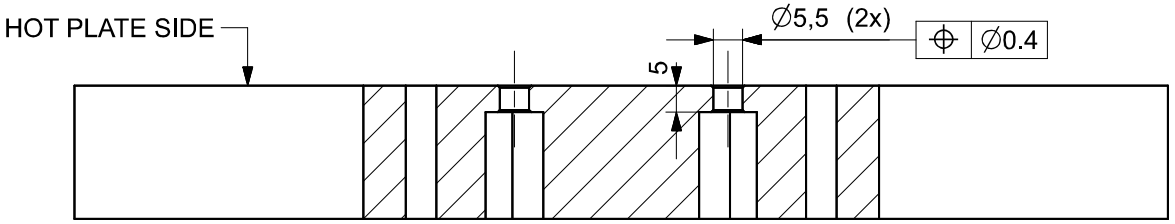

SECTION A-A

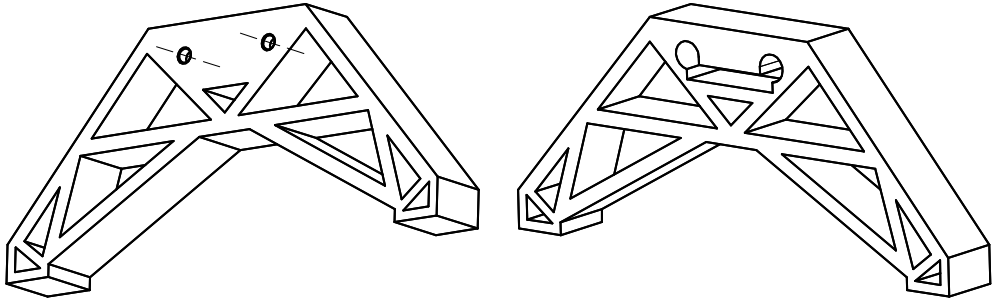

FreezerSIG			MATERIAL: ABS
SIZE: A3	GENERAL ROUGHNESS: Ra 30	MASS [kg]: 0.13	TREATMENT: 3D PRINTED
PCS: 2	TOLERANCES: ISO 2768	COARSE C	NAME: LEAG
SCALE: 1:1	ISO PROJECTION:		PART NUMBER: CAD-SLIDER-01-01-001v1-sh001-D2D-A3 — VER: A
			DESIGNED: FreezerSIG — SIGN & DATE:
SHEET: 1 OF 1	ALL DIMENSIONS IN MM		APPROVED: — SIGN & DATE:
			www.freezersig.pl

THIS DRAWING NOT BE COPIED OR DUPLICATED NOR MADE AVAILABLE TO THIRD PARTIES WITHOUT MY WRITTEN CONSENT

A3